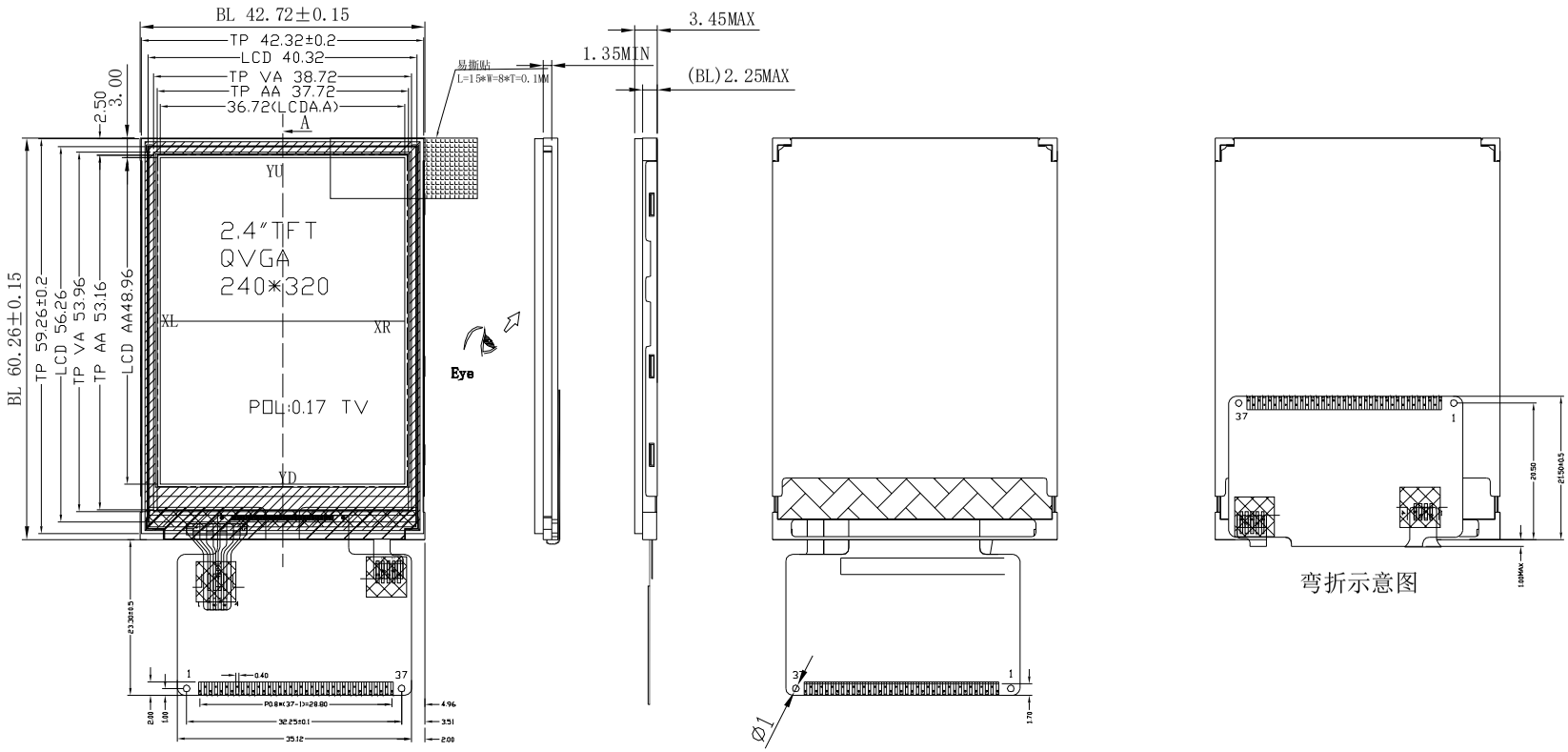

PIN	DESCRIPTION
1	DB0
2	DB1
3	DB2
4	DB3
5	GND
6	IOVCC
7	CS
8	RS
9	WR
10	RD
11	IM0
12	X+
13	Y+
14	X-
15	Y-
16	LED-A
17	LED-1
18	LED-2
19	LED-3
20	LED-4
21	FMARK
22	DB4
23	DB8
24	DB9
25	DB10
26	DB11
27	DB12
28	DB13
29	DB14
30	DB15
31	RESET
32	VCC
33	IOVCC
34	GND
35	DB5
36	DB6
37	DB7

LCD Type	2.4"TFT,Transmissive, Normally white,TN
Resolution	240*(RGB)*320
View Direction	6 O'CLOCK
Driver IC	ILI9341V
Color Depth	65K
Interface Types	MCU8/16-bit
Operating voltage	VDD=3.3V
With/without TP	With RTP
Backlight LEDs	4 LEDs，80mA
Operating temperature	-20 C° ~70 C°
Storage Temperature	-30 C° ~80 C°
Storage Humidity	T=60℃ 90%R.H

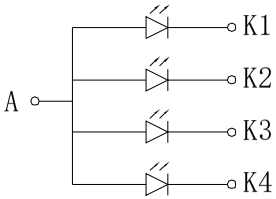

PIN	WIRING
1	YU
2	XL
3	YD
4	XR

" Need to pay attention to the key size with *

东莞市一众显示科技有限公司
DONG GUAN TEAM SOURCE DISPLAY TECH. CO, LTD.

版本(Version)	变更记录(Change History)	日期(Date)
V1		
V2		
V3		

视 角 (View):		比例(Proportion):	1 : 1
单 位 (Unit):	M M	页 面 (Page):	1 / 1
产品型号 (Product Type):	TST24003T-01P		
版 本 (Version):	V0		

设 计 (DESIGN)	审 核 (AUDITING)	批 准 (APPROVED)